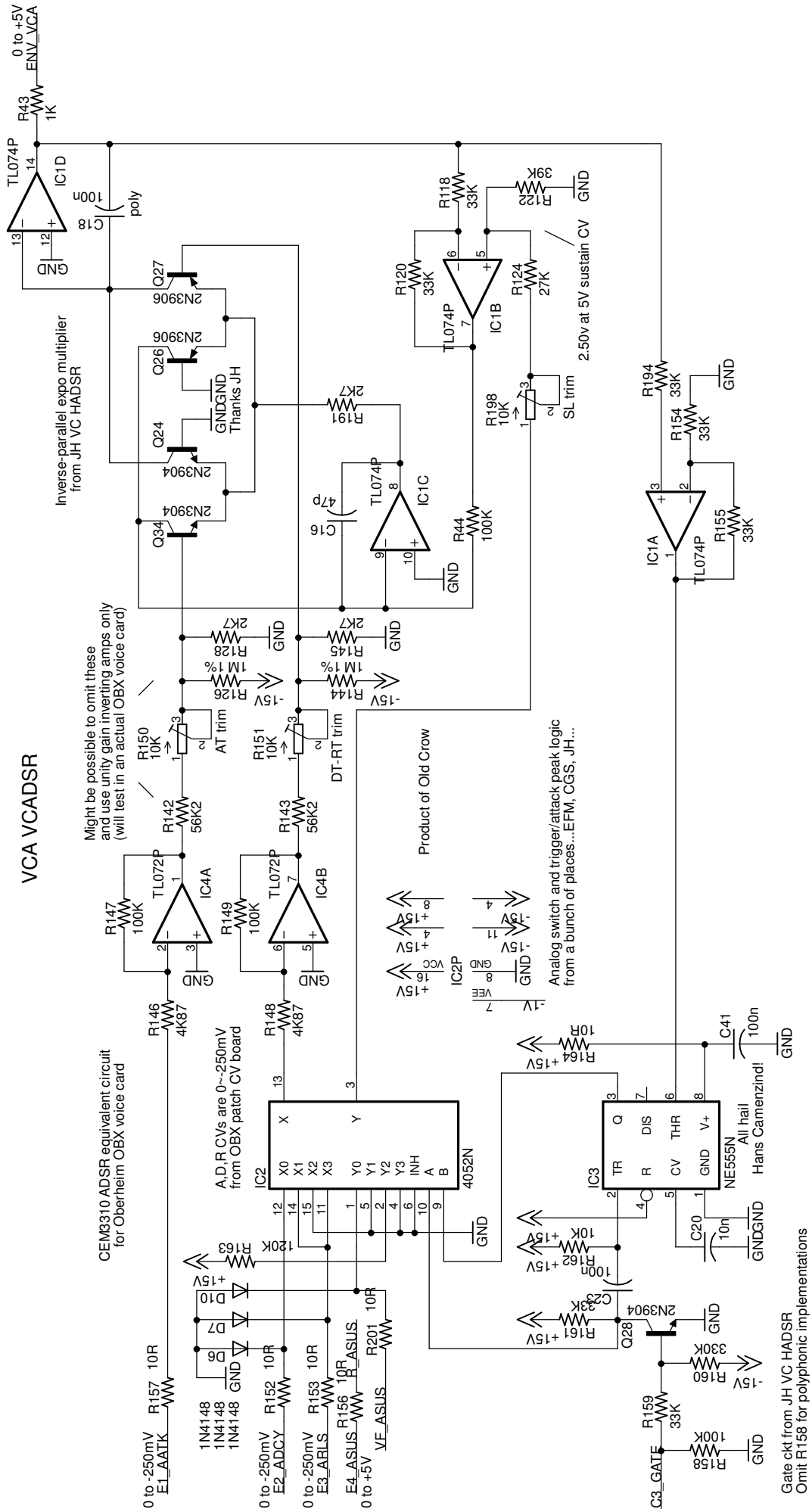
VCA VCADSR
0 to +5V
ENV_VCA
R43
1K
TL074P
IC1D
C18
100n
poly
GND
Inverse-parallel expo multiplier
from JH VC HADSR
Q27
2N3906
Q26
2N3906
Q24
2N3904
Q34
2N3904
GNDGND
Thanks JH
R191
2K7
C16
47p
TL074P
IC1C
R44
100K
R118
33K
R122
39K
R120
33K
TL074P
IC1B
R124
27K
2.50v at 5V sustain CV
R198
10K
SL trim
R194
33K
R154
33K
IC1A
TL074P
R155
33K
Might be possible to omit these
and use unity gain inverting amps only
(will test in an actual OBX voice card)
R128
2K7
R145
2K7
R126
1M 1%
R144
1M 1%
-15V
R150
10K
AT trim
R151
10K
DT-RT trim
R142
56K2
R143
56K2
Product of Old Crow
R147
100K
TL072P
IC4A
R149
100K
TL072P
IC4B
+15V
-15V
IC2P
Analog switch and trigger/attack peak logic
from a bunch of places...EFM, CGS, JH...
R146
4K87
R148
4K87
CEM3310 ADSR equivalent circuit
for Oberheim OBX voice card
A,D,R CVs are 0~-250mV
from OBX patch CV board
IC2
4052N
X0
X1
X2
X3
X
Y0
Y1
Y2
Y3
Y
INH
A
B
R164
10R
C41
100n
IC3
NE555N
All hail
Hans Camenzind!
TR
R
CV
Q
DIS
THR
GND
V+
R163
120K
R162
10K
C20
10n
GNDGND
C23
100n
R161
33K
Q28
2N3904
R160
330K
R159
33K
R158
100K
D10
D7
D6
1N4148
1N4148
1N4148
R157
10R
R152
10R
R153
10R
R156
10R
R201
10R
R_ASUS
VF_ASUS
0 to -250mV
E1_AATK
0 to -250mV
E2_ADCY
0 to -250mV
E3_ARLS
E4_ASUS
0 to +5V
C3_GATE
Gate ckt from JH VC HADSR
Omit R158 for polyphonic implementations